LECTURE 5

Linear combinations

The implication of closure

Dr Ilia Pirashvili
Department of Mathematics, University of Galway
21 September 2026 · Winter 2026

Where we got to

LAST LECTURE

- $U \subseteq V$ is a subspace if (U1) $\mathbf{0} \in U$, (U2) U is closed under $+$, (U3) U is closed under scaling.
- Linear equations with right-hand side 0 cut out subspaces; affine conditions, inequalities and curved sets do not.
- $U \cap W$ is always a subspace, $U \cup W$ never is unless w.l.o.g. $U \subseteq V$.

  W.l.o.g. abbreviates "without loss of generality" and means here "either one lies in the other".
- $\lambda_1 \mathbf{v}_1 + \cdots + \lambda_k \mathbf{v}_k$ is a **linear combination**, and any subspace containing the $\mathbf{v}_i$ must contain all of them.

Thus far we have asked if a subset was a subspace. Now we want to build them.

Warm-up

WARM-UP

1. Is $H = \left\{ \begin{bmatrix} x \\ y \end{bmatrix} \in \mathbb{R}^2 \;\middle|\; 2x = 3y \right\}$ a subspace of $\mathbb{R}^2$?
2. Suppose a subspace $U \subseteq \mathbb{R}^2$ contains both $\begin{bmatrix} 1 \\ 0 \end{bmatrix}$ and $\begin{bmatrix} 1 \\ 1 \end{bmatrix}$. Must U be all of $\mathbb{R}^2$?

Warm-up

WARM-UP

1. Is $H = \left\{ \begin{bmatrix} x \\ y \end{bmatrix} \in \mathbb{R}^2 \;\middle|\; 2x = 3y \right\}$ a subspace of $\mathbb{R}^2$?
2. Suppose a subspace $U \subseteq \mathbb{R}^2$ contains both $\begin{bmatrix} 1 \\ 0 \end{bmatrix}$ and $\begin{bmatrix} 1 \\ 1 \end{bmatrix}$. Must U be all of $\mathbb{R}^2$?

1 Yes: linear, right-hand side 0. It is the line through $\begin{bmatrix} 3 \\ 2 \end{bmatrix}$.

2 Yes. By (U3) and (U2), U contains $a\left[\begin{smallmatrix} 1 \\ 0 \end{smallmatrix}\right] + b\left[\begin{smallmatrix} 1 \\ 1 \end{smallmatrix}\right] = \left[\begin{smallmatrix} a+b \\ b \end{smallmatrix}\right]$ for all a, b, and every $\left[\begin{smallmatrix} p \\ q \end{smallmatrix}\right]$ is of that form: take $b = q$, $a = p - q$.

SECTION 1

Where the subspaces are

All subspaces of $\mathbb{R}^2$

There are only three kinds.

- $\{\mathbf{0}\}$, the origin alone.
- Every line through the origin.
- $\mathbb{R}^2$ itself.

Nothing else qualifies. A curve bends out of itself when scaled, and a line off the origin fails (U1). A half-plane/line is closed under addition, and may even contain the origin, but loses its negatives.

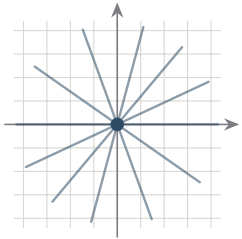

A few of the infinitely many lines.

All subspaces of $\mathbb{R}^3$

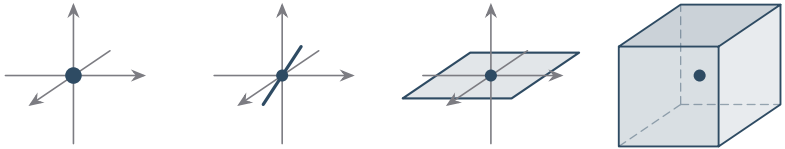

$\{\mathbf{0}\}$	a line through $\mathbf{0}$	a plane through $\mathbf{0}$	$\mathbb{R}^3$
Dimension 0	Dimension 1	Dimension 2	Dimension 3

Every subspace of $\mathbb{R}^3$ is one of these four kinds. They may rotate, but they never curve and never leave the origin.

SECTION 2

Linear combinations

Definition

DEFINITION 5.1 · Linear combination

Let $\mathbf{v}_1, \ldots, \mathbf{v}_k$ be vectors in a vector space V. A **linear combination** of them is any vector of the form

$$\lambda_1 \mathbf{v}_1 + \lambda_2 \mathbf{v}_2 + \cdots + \lambda_k \mathbf{v}_k, \qquad \lambda_1, \ldots, \lambda_k \in \mathbb{R}.$$

The numbers λ_i are the **coefficients**.

Only two operations appear: $+$ and scaling, as they are the only two we have. So a linear combination is the most general thing that can be built from a list of vectors.

What happens if the λ_i run through all possible values? We shall see: A subspace.

The geometry of one sum

Let

$$\mathbf{v}_1 = \begin{bmatrix} 1 \\ 2 \end{bmatrix}, \qquad \mathbf{v}_2 = \begin{bmatrix} -1 \\ 1 \end{bmatrix}.$$

Then

$$\mathbf{v}_1 + \mathbf{v}_2 = \begin{bmatrix} 1 + (-1) \\ 2 + 1 \end{bmatrix} = \begin{bmatrix} 0 \\ 3 \end{bmatrix},$$

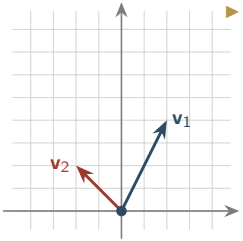

The geometry of one sum

Let

$$\mathbf{v}_1 = \begin{bmatrix} 1 \\ 2 \end{bmatrix}, \qquad \mathbf{v}_2 = \begin{bmatrix} -1 \\ 1 \end{bmatrix}.$$

Then

$$\mathbf{v}_1 + \mathbf{v}_2 = \begin{bmatrix} 1 + (-1) \\ 2 + 1 \end{bmatrix} = \begin{bmatrix} 0 \\ 3 \end{bmatrix},$$

which is the fourth corner of the parallelogram with sides $\mathbf{v}_1$ and $\mathbf{v}_2$.

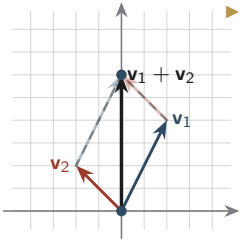

Building $2\mathbf{v}_1 + \mathbf{v}_2$

Algebraically there is nothing to it:

$$2\begin{bmatrix}1\\2\end{bmatrix} + \begin{bmatrix}-1\\1\end{bmatrix} = \begin{bmatrix}2-1\\4+1\end{bmatrix} = \begin{bmatrix}1\\5\end{bmatrix}.$$

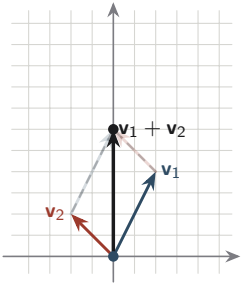

Building $2\mathbf{v}_1 + \mathbf{v}_2$

Algebraically there is nothing to it:

$$2\begin{bmatrix}1\\2\end{bmatrix} + \begin{bmatrix}-1\\1\end{bmatrix} = \begin{bmatrix}2-1\\4+1\end{bmatrix} = \begin{bmatrix}1\\5\end{bmatrix}.$$

But we may also use associativity (A2) and distributivity (S2) to reuse what we already have:

$$2\mathbf{v}_1 + \mathbf{v}_2 = \mathbf{v}_1 + (\mathbf{v}_1 + \mathbf{v}_2),$$

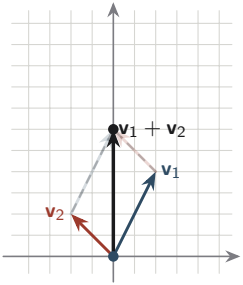

Building $2\mathbf{v}_1 + \mathbf{v}_2$

Algebraically there is nothing to it:

$$2\begin{bmatrix}1\\2\end{bmatrix} + \begin{bmatrix}-1\\1\end{bmatrix} = \begin{bmatrix}2-1\\4+1\end{bmatrix} = \begin{bmatrix}1\\5\end{bmatrix}.$$

But we may also use associativity (A2) and distributivity (S2) to reuse what we already have:

$$2\mathbf{v}_1 + \mathbf{v}_2 = \mathbf{v}_1 + (\mathbf{v}_1 + \mathbf{v}_2),$$

so we take $\left[\begin{smallmatrix}0\\3\end{smallmatrix}\right]$ from the last slide and add one more copy of $\mathbf{v}_1$. A second parallelogram, stacked on the first.

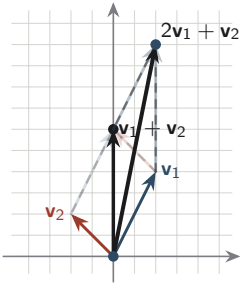

Following the footprints

What if we now take

$$3\mathbf{v}_1 + \mathbf{v}_2?$$

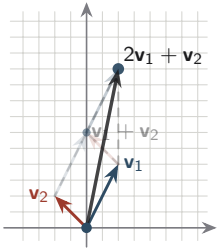

Following the footprints

What if we now take

$$3\mathbf{v}_1 + \mathbf{v}_2?$$

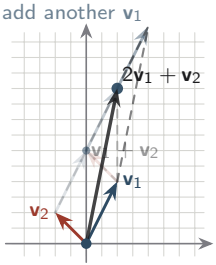

Following the footprints

What if we now take

$$3\mathbf{v}_1 + \mathbf{v}_2?$$

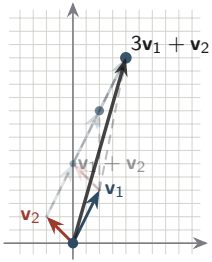

Following the footprints

And then

$$4\mathbf{v}_1 + \mathbf{v}_2?$$

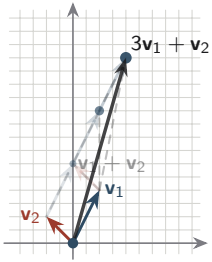

Following the footprints

And then

$$4\mathbf{v}_1 + \mathbf{v}_2?$$

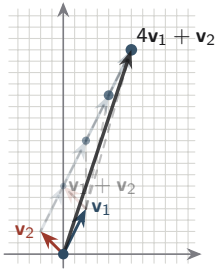

Following the footprints

And

$$5\mathbf{v}_1 + \mathbf{v}_2?$$

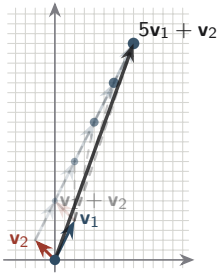

Following the footprints

What about

$$10\mathbf{v}_1 + \mathbf{v}_2?$$

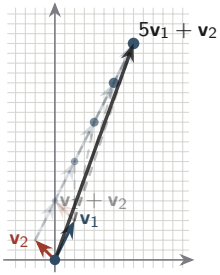

Following the footprints

What about

$$10\mathbf{v}_1 + \mathbf{v}_2?$$

$$100\mathbf{v}_1 + \mathbf{v}_2?$$

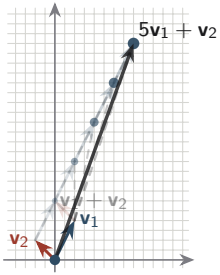

Following the footprints

What about

$$10\mathbf{v}_1 + \mathbf{v}_2?$$

$$100\mathbf{v}_1 + \mathbf{v}_2?$$

What do you notice?

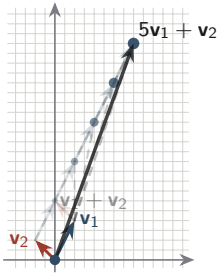

Following the footprints

They edge closer and closer to the direction of $\mathbf{v}_1$.

Asymptotically.

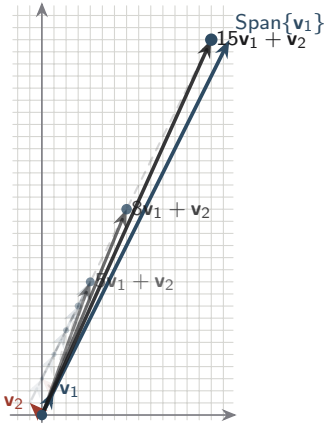

Following the footprints

They edge closer and closer to the direction of $\mathbf{v}_1$.

Asymptotically.

Will they ever cross over it?

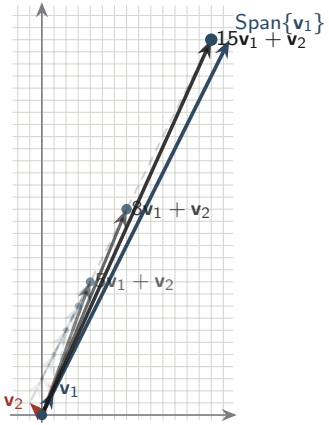

Following the footprints

Suppose instead

$$\mathbf{v}_1 = \begin{bmatrix} 1 \\ 0 \end{bmatrix}, \qquad \mathbf{v}_2 = \begin{bmatrix} 0 \\ 1 \end{bmatrix},$$

and we start at $\begin{bmatrix} 2 \\ 3 \end{bmatrix}$ and keep adding $\mathbf{v}_1$. The resulting vectors would get more and more horizonta, closer to the x-axis, but would it ever cross it? Meaning could the first coordinate ever turn negative?

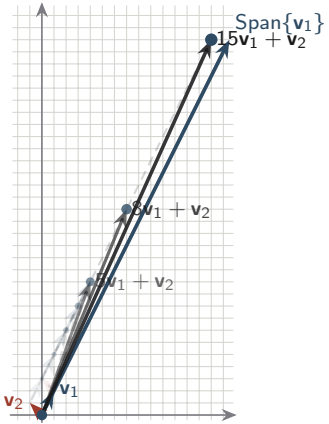

Following the footprints

Then why would it here?

Linear combinations of vectors with **poritive coefficients** will always land between the vectors.

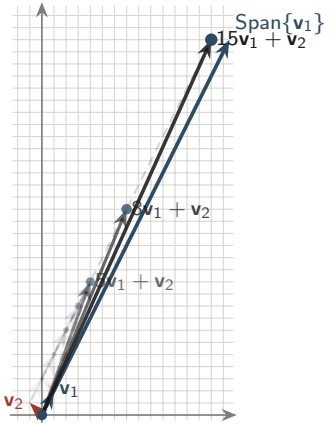

Recognising a linear combination ▸

Is $\begin{bmatrix} 5 \\ 1 \end{bmatrix}$ a linear combination of $\mathbf{u} = \begin{bmatrix} 1 \\ 1 \end{bmatrix}$ and $\mathbf{v} = \begin{bmatrix} 1 \\ -1 \end{bmatrix}$?

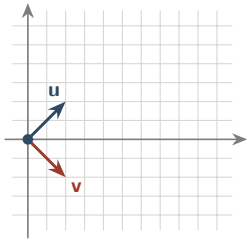

Three steps along $\mathbf{u}$, then two along $\mathbf{v}$.

Recognising a linear combination ▸

Is $\begin{bmatrix}5\\1\end{bmatrix}$ a linear combination of $\mathbf{u} = \begin{bmatrix}1\\1\end{bmatrix}$ and $\mathbf{v} = \begin{bmatrix}1\\-1\end{bmatrix}$?

Solve $a\mathbf{u} + b\mathbf{v} = \left[\begin{smallmatrix}5\\1\end{smallmatrix}\right]$, that is

$$a\begin{bmatrix}1\\1\end{bmatrix} + b\begin{bmatrix}1\\-1\end{bmatrix} = \begin{bmatrix}5\\1\end{bmatrix},$$

the pair of simultaneous equations

$$a + b = 5, \qquad a - b = 1.$$

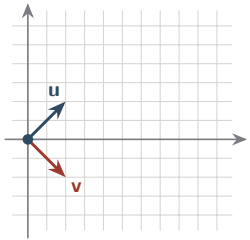

Three steps along **u**, then two along **v**.

Recognising a linear combination ▸

Is $\begin{bmatrix}5\\1\end{bmatrix}$ a linear combination of $\mathbf{u} = \begin{bmatrix}1\\1\end{bmatrix}$ and $\mathbf{v} = \begin{bmatrix}1\\-1\end{bmatrix}$?

Adding and subtracting gives $a = 3$, $b = 2$, and indeed

$$3\mathbf{u} + 2\mathbf{v} = \begin{bmatrix}3\\3\end{bmatrix} + \begin{bmatrix}2\\-2\end{bmatrix} = \begin{bmatrix}5\\1\end{bmatrix}.$$

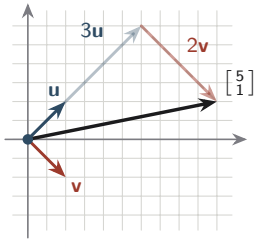

Three steps along **u**, then two along **v**.

A simple failure ▸

Is $\begin{bmatrix}1\\2\end{bmatrix}$ a linear combination of $\mathbf{w} = \begin{bmatrix}1\\1\end{bmatrix}$ alone?

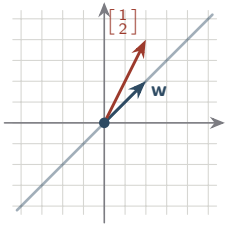

The multiples of $\mathbf{w}$ fill one line, and the target is off it.

A simple failure ▸

Is $\begin{bmatrix}1\\2\end{bmatrix}$ a linear combination of $\mathbf{w} = \begin{bmatrix}1\\1\end{bmatrix}$ alone?

A linear combination of a single vector is just a multiple, so we need $t \in \mathbb{R}$ with

$$t\begin{bmatrix}1\\1\end{bmatrix} = \begin{bmatrix}t\\t\end{bmatrix} = \begin{bmatrix}1\\2\end{bmatrix}.$$

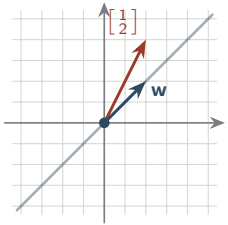

The multiples of **w** fill one line, and the target is off it.

A simple failure ▸

Is $\begin{bmatrix}1\\2\end{bmatrix}$ a linear combination of $\mathbf{w} = \begin{bmatrix}1\\1\end{bmatrix}$ alone?

A linear combination of a single vector is just a multiple, so we need $t \in \mathbb{R}$ with

$$t\begin{bmatrix}1\\1\end{bmatrix} = \begin{bmatrix}t\\t\end{bmatrix} = \begin{bmatrix}1\\2\end{bmatrix}.$$

The first coordinate forces $t = 1$, the second forces $t = 2$. No such t exists: the answer is **No.**

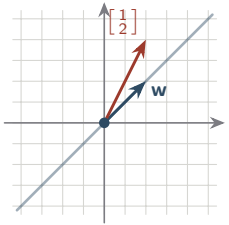

The multiples of $\mathbf{w}$ fill one line, and the target is off it.

The same game with polynomials

Work in P_2, and put $p_1 = 1 + x$ and $p_2 = x + x^2$.

EXAMPLE 5.2 ▸ ·

Is $q = 3 + 5x + 2x^2$ a linear combination of p_1 and p_2?

Comparing coefficients is legitimate because two polynomials are equal exactly when all their coefficients agree.

The same game with polynomials

Work in P_2, and put $p_1 = 1 + x$ and $p_2 = x + x^2$.

EXAMPLE 5.2 ▸ ·

Is $q = 3 + 5x + 2x^2$ a linear combination of p_1 and p_2?

We are looking for $a, b \in \mathbb{R}$ with $ap_1 + bp_2 = q$, that is

$$a(1 + x) + b(x + x^2) \;=\; 3 + 5x + 2x^2.$$

Comparing coefficients is legitimate because two polynomials are equal exactly when all their coefficients agree.

The same game with polynomials

Work in P_2, and put $p_1 = 1 + x$ and $p_2 = x + x^2$.

EXAMPLE 5.2 ▸ · A success

Is $q = 3 + 5x + 2x^2$ a linear combination of p_1 and p_2?
Collecting powers on the left,

$$a + (a + b)x + bx^2 \;=\; 3 + 5x + 2x^2,$$

and comparing coefficients gives

$$a \;=\; 3, \qquad a + b \;=\; 5, \qquad b \;=\; 2,$$

which agree. Indeed $3p_1 + 2p_2 = q$.

Comparing coefficients is legitimate because two polynomials are equal exactly when all their coefficients agree.

The same game with polynomials

EXAMPLE 5.3 ▸ ·

Is $r = 1 + 4x + x^2$ a linear combination of $p_1 = 1 + x$, $p_2 = x + x^2$?

The same game with polynomials

EXAMPLE 5.3 ▸ ·

Is $r = 1 + 4x + x^2$ a linear combination of $p_1 = 1 + x$, $p_2 = x + x^2$? The same comparison gives

$$a + (a + b)x + bx^2 \;=\; 1 + 4x + x^2, \quad \text{so} \quad a \;=\; 1, \quad a + b \;=\; 4, \quad b \;=\; 1,$$

and the middle equation contradicts the other two: No.

The same game with polynomials

EXAMPLE 5.3 ▸ · A failure

Is $r = 1 + 4x + x^2$ a linear combination of $p_1 = 1 + x$, $p_2 = x + x^2$? The same comparison gives

$$a + (a + b)x + bx^2 \;=\; 1 + 4x + x^2, \quad \text{so} \quad a \;=\; 1, \quad a + b \;=\; 4, \quad b \;=\; 1,$$

and the middle equation contradicts the other two: **No.**

KEY IDEA

Both times the question became a system of linear equations. That is no coincidence, and it is why so much of this module is about solving them.

How many vectors do we need?

EXAMPLE 5.4

Is $r = 1 + 4x + x^2$ a linear combination of 1, x and x^2?

How many vectors do we need?

EXAMPLE 5.4

Is $r = 1 + 4x + x^2$ a linear combination of 1, x and x^2? Yes. For $a = 1$, $b = 4$, $c = 1$

$$r \;=\; a \cdot 1 + b \cdot x + c \cdot x^2.$$

How many vectors do we need?

EXAMPLE 5.4

Is $r = 1 + 4x + x^2$ a linear combination of 1, x and x^2? Yes. For $a = 1$, $b = 4$, $c = 1$

$$r = a \cdot 1 + b \cdot x + c \cdot x^2.$$

THERE IS A MINIMAL AMOUNT OF VECTORS WE NEED

What failed on the last slide was not that p_1 and p_2 were complicated. It was that there were only *two* of them, and P_2 needs three coefficients. No two polynomials will ever produce all of P_2.

SECTION 3

Where linear combinations come from

A matrix product, split apart

Take

$$A = \begin{bmatrix} 1 & 2 & -1 \\ -1 & 0 & 4 \end{bmatrix}, \qquad \mathbf{x} = \begin{bmatrix} a \\ b \\ c \end{bmatrix}.$$

Multiplying out in the usual way, row against column,

$$A\mathbf{x} = \begin{bmatrix} 1a + 2b - 1c \\ -1a + 0b + 4c \end{bmatrix}.$$

A matrix product, split apart

Take

$$A = \begin{bmatrix} 1 & 2 & -1 \\ -1 & 0 & 4 \end{bmatrix}, \qquad \mathbf{x} = \begin{bmatrix} a \\ b \\ c \end{bmatrix}.$$

Multiplying out in the usual way, row against column,

$$A\mathbf{x} = \begin{bmatrix} 1a + 2b - 1c \\ -1a + 0b + 4c \end{bmatrix}.$$

Now split that single vector into three pieces, one for each of a, b and c:

$$\begin{bmatrix} 1a + 2b - 1c \\ -1a + 0b + 4c \end{bmatrix} = \begin{bmatrix} 1a \\ -1a \end{bmatrix} + \begin{bmatrix} 2b \\ 0b \end{bmatrix} + \begin{bmatrix} -1c \\ 4c \end{bmatrix} = a \begin{bmatrix} 1 \\ -1 \end{bmatrix} + b \begin{bmatrix} 2 \\ 0 \end{bmatrix} + c \begin{bmatrix} -1 \\ 4 \end{bmatrix}.$$

The columns of A, one at a time

$$\begin{bmatrix} 1 & 2 & -1 \\ -1 & 0 & 4 \end{bmatrix} \begin{bmatrix} a \\ b \\ c \end{bmatrix} =$$

The columns of A, one at a time

$$\begin{bmatrix} 1 & 2 & -1 \\ -1 & 0 & 4 \end{bmatrix} \begin{bmatrix} a \\ b \\ c \end{bmatrix} = a \begin{bmatrix} 1 \\ -1 \end{bmatrix}$$

The first entry of **x** selects the *first column* of A and scales it by a.

The columns of A, one at a time

$$\begin{bmatrix} 1 & 2 & -1 \\ -1 & 0 & 4 \end{bmatrix} \begin{bmatrix} a \\ b \\ c \end{bmatrix} = a \begin{bmatrix} 1 \\ -1 \end{bmatrix} + b \begin{bmatrix} 2 \\ 0 \end{bmatrix}$$

The second entry selects the *second column* and scales it by b.

The columns of A, one at a time

$$\begin{bmatrix} 1 & 2 & -1 \\ -1 & 0 & 4 \end{bmatrix} \begin{bmatrix} a \\ b \\ c \end{bmatrix} = a \begin{bmatrix} 1 \\ -1 \end{bmatrix} + b \begin{bmatrix} 2 \\ 0 \end{bmatrix} + c \begin{bmatrix} -1 \\ 4 \end{bmatrix}$$

The third entry selects the *third column* and scales it by c.

The columns of A, one at a time

$$\begin{bmatrix} 1 & 2 & -1 \\ -1 & 0 & 4 \end{bmatrix} \begin{bmatrix} a \\ b \\ c \end{bmatrix} = a \begin{bmatrix} 1 \\ -1 \end{bmatrix} + b \begin{bmatrix} 2 \\ 0 \end{bmatrix} + c \begin{bmatrix} -1 \\ 4 \end{bmatrix}$$

READ A MATRIX BY ITS COLUMNS

$A\mathbf{x}$ is precisely a linear combination of the columns of A, and the entries of $\mathbf{x}$ are the coefficients.

Why this matters

As $\mathbf{x}$ runs over all of $\mathbb{R}^3$, the coefficients a, b, c run over all triples of real numbers. So the set of all products $A\mathbf{x}$ is exactly the set of all linear combinations of

$$\begin{bmatrix} 1 \\ -1 \end{bmatrix}, \qquad \begin{bmatrix} 2 \\ 0 \end{bmatrix}, \qquad \begin{bmatrix} -1 \\ 4 \end{bmatrix}.$$

- A matrix is a machine for producing linear combinations of a fixed list of vectors.
- Conversely, any question about linear combinations of a list of vectors can be rewritten as a question about a matrix.

One question in two languages ▸

KEY IDEA

Asking whether $\mathbf{w} = \begin{bmatrix} 2 \\ 7 \\ 3 \end{bmatrix}$ is a linear combination of $\mathbf{v}_1 = \begin{bmatrix} -1 \\ 0 \\ 1 \end{bmatrix}$, $\mathbf{v}_2 = \begin{bmatrix} 1 \\ 1 \\ -1 \end{bmatrix}$ and $\mathbf{v}_3 = \begin{bmatrix} 2 \\ -1 \\ 7 \end{bmatrix}$ is exactly asking whether $A\mathbf{x} = \mathbf{w}$, where $A = \begin{bmatrix} \mathbf{v}_1 & \mathbf{v}_2 & \mathbf{v}_3 \end{bmatrix}$, is solvable. Written out, we ask if

$$\begin{bmatrix} -1 & 1 & 2 \\ 0 & 1 & -1 \\ 1 & -1 & 7 \end{bmatrix} \begin{bmatrix} a \\ b \\ c \end{bmatrix} = \begin{bmatrix} 2 \\ 7 \\ 3 \end{bmatrix}$$

has a solution.

KEY IDEA

Asking whether $\mathbf{w} = \begin{bmatrix} 2 \\ 7 \\ 3 \end{bmatrix}$ is a linear combination of $\mathbf{v}_1 = \begin{bmatrix} -1 \\ 0 \\ 1 \end{bmatrix}$, $\mathbf{v}_2 = \begin{bmatrix} 1 \\ 1 \\ -1 \end{bmatrix}$ and $\mathbf{v}_3 = \begin{bmatrix} 2 \\ -1 \\ 7 \end{bmatrix}$ is exactly asking whether $A\mathbf{x} = \mathbf{w}$, where $A = \begin{bmatrix} \mathbf{v}_1 & \mathbf{v}_2 & \mathbf{v}_3 \end{bmatrix}$, is solvable. Written out, we ask if

$$\begin{bmatrix} -1 & 1 & 2 \\ 0 & 1 & -1 \\ 1 & -1 & 7 \end{bmatrix} \begin{bmatrix} a \\ b \\ c \end{bmatrix} = \begin{bmatrix} 2 \\ 7 \\ 3 \end{bmatrix}$$

has a solution.

And if Det $A \neq 0$ we already know the answer is yes for *every* $\mathbf{w}$, with $\mathbf{x} = A^{-1}\mathbf{w}$.

Summary of Lecture 5

SHAPE	The subspaces of $\mathbb{R}^2$ are $\{\mathbf{0}\}$, the lines through $\mathbf{0}$, and $\mathbb{R}^2$; those of $\mathbb{R}^3$ add the planes through $\mathbf{0}$.
DEFINITION	A **linear combination** of $\mathbf{v}_1, \ldots, \mathbf{v}_k$ is $\lambda_1\mathbf{v}_1 + \cdots + \lambda_k\mathbf{v}_k$; the λ_i are the coefficients.
GEOMETRY	Each new term lays another parallelogram on the last. The points $k\mathbf{v}_1 + \mathbf{v}_2$ approach the direction of $\mathbf{v}_1$ without ever reaching it.
METHOD	"Is $\mathbf{w}$ a linear combination of these?" can be equivalently asked as a system of linear equations. This is especially clear for polynomials, where it's comparing coefficients.
COLUMNS	$A\mathbf{x}$ is a linear combination of the columns of A, with the entries of $\mathbf{x}$ as coefficients.
BOTH WAYS	Thus questions of linear combinations boil down to questions on the determinant.

Before next time

AT HOME

1. Let $\mathbf{v}_1 = \begin{bmatrix}1 & 1 & 1\end{bmatrix}^\mathsf{T}$, $\mathbf{v}_2 = \begin{bmatrix}0 & 1 & 2\end{bmatrix}^\mathsf{T}$, $\mathbf{v}_3 = \begin{bmatrix}1 & 0 & -1\end{bmatrix}^\mathsf{T}$. Is $\begin{bmatrix}4 & -1 & 5\end{bmatrix}^\mathsf{T}$ a linear combination of them? ▸ What about $\begin{bmatrix}2 & 3 & 4\end{bmatrix}^\mathsf{T}$? ▸
2. In P_2, is $q = 2 + 3x - x^2$ a linear combination ▸ of $p_1 = 1 + x^2$, $p_2 = x - x^2$ and $p_3 = 1 + x$? If so, in how many ways?
3. Let A be the matrix with columns $\begin{bmatrix}1 & 2 & 0\end{bmatrix}^\mathsf{T}$, $\begin{bmatrix}0 & 1 & 1\end{bmatrix}^\mathsf{T}$, $\begin{bmatrix}1 & 0 & 1\end{bmatrix}^\mathsf{T}$. Compute Det A ▸, and say what it tells you about which vectors of $\mathbb{R}^3$ are linear combinations of those three.

END OF LECTURE 5

ilia.pirashvili@universityofgalway.ac.ie

Solution: question 1

$\begin{bmatrix}4 & -1 & 5\end{bmatrix}^T$: NO ▸

We need $a+c=4$, $a+b=-1$ and $a+2b-c=5$. Adding the first and third gives $2a+2b=9$, so $a+b=\frac{9}{2}$, which contradicts the second equation. No solution exists.

Solution: question 1

$\begin{bmatrix}4 & -1 & 5\end{bmatrix}^{\mathsf{T}}$: NO ▸

We need $a + c = 4$, $a + b = -1$ and $a + 2b - c = 5$. Adding the first and third gives $2a + 2b = 9$, so $a + b = \frac{9}{2}$, which contradicts the second equation. No solution exists.

$\begin{bmatrix}2 & 3 & 4\end{bmatrix}^{\mathsf{T}}$: YES ▸

Taking $c = 0$, the equations read $a = 2$, $a + b = 3$, $a + 2b = 4$, which are consistent with $a = 2$, $b = 1$. So $\begin{bmatrix}2 & 3 & 4\end{bmatrix}^{\mathsf{T}} = 2\mathbf{v}_1 + \mathbf{v}_2$.

Note $\mathbf{v}_3 = \mathbf{v}_1 - \mathbf{v}_2$: all three lie in the plane $x - 2y + z = 0$, and the first target does not.

Solution: question 2 ▸

YES, AND IN INFINITELY MANY WAYS

Collecting powers,

$$a(1+x^2)+b(x-x^2)+c(1+x) \;=\; (a+c)+(b+c)x+(a-b)x^2,$$

so we need $a+c=2$, $b+c=3$ and $a-b=-1$. The third says $a=b-1$; substituting into the first gives $b+c=3$, which is the second equation again.

Solution: question 2 ▸

YES, AND IN INFINITELY MANY WAYS

Collecting powers,

$$a(1+x^2)+b(x-x^2)+c(1+x) \;=\; (a+c)+(b+c)x+(a-b)x^2,$$

so we need $a+c=2$, $b+c=3$ and $a-b=-1$. The third says $a=b-1$; substituting into the first gives $b+c=3$, which is the second equation again.

One equation is therefore redundant, and c may be chosen freely: $c=0$ gives $q=2p_1+3p_2$, while $c=1$ gives $q=p_1+2p_2+p_3$.

Coefficients need not be unique. Deciding when they are is the subject of linear independence.

Solution: question 3 ▸

SOLUTION

$$\text{Det}\, A \;=\; \text{Det} \begin{bmatrix} 1 & 0 & 1 \\ 2 & 1 & 0 \\ 0 & 1 & 1 \end{bmatrix} \;=\; 1(1-0) - 0(2-0) + 1(2-0) \;=\; 3 \neq 0.$$

So A is invertible, and $A\mathbf{x} = \mathbf{w}$ has the solution $\mathbf{x} = A^{-1}\mathbf{w}$ for *every* $\mathbf{w} \in \mathbb{R}^3$.

Solution: question 3 ▸

SOLUTION

$$\operatorname{Det} A \;=\; \operatorname{Det} \begin{bmatrix} 1 & 0 & 1 \\ 2 & 1 & 0 \\ 0 & 1 & 1 \end{bmatrix} \;=\; 1(1-0) - 0(2-0) + 1(2-0) \;=\; 3 \neq 0.$$

So A is invertible, and $A\mathbf{x} = \mathbf{w}$ has the solution $\mathbf{x} = A^{-1}\mathbf{w}$ for *every* $\mathbf{w} \in \mathbb{R}^3$.

Hence every vector of $\mathbb{R}^3$ is a linear combination of those three columns, and the coefficients are unique since $A^{-1}\mathbf{w}$ is the only solution.